WATERCO
water, the liquid of life



EXOTUF Filter

Superior strength and dependability

Designed to cope with the cyclic pressures of the modern day swimming pool, Exotuf filter vessels are precision injection moulded for superior strength and dependability.

Exotuf filters are ideal for pools equipped with in floor cleaning systems and high powered pumps.

- Granular media filtration
- Multiport valve for ease of use
- Pressure rated at 350 kPa
- Corrosion and UV resistant

10 YEAR WARRANTY

www.waterco.com

Superior Strength

Exotuf filters are considered one of the strongest filters within its class. Its filter vessel is precision injection moulded within minimal tolerances for enhanced structural strength.

Pressure rated at 350 kPa, Exotuf filters are ideal for pools equipped with in floor cleaning systems and high powered pumps.

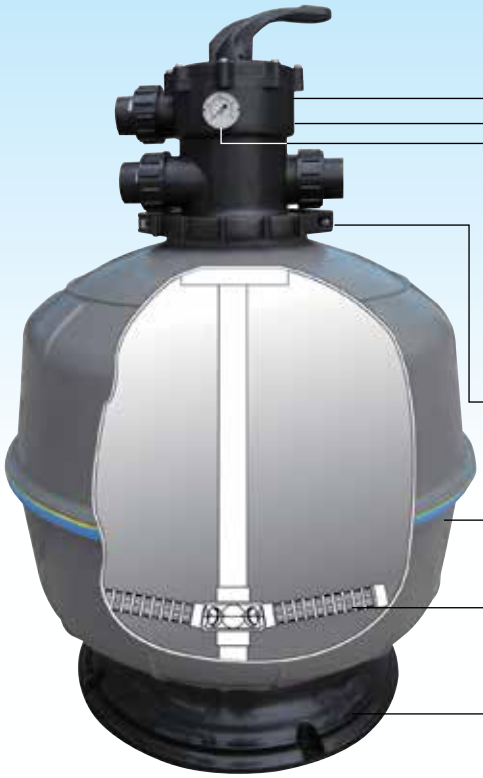

- Multiport valve with ergonomic handle and quick connect barrel unions
- Clear sight glass for backwash inspection
- Pressure gauge to determine the filter's capacity
- Multiport valve clamp provides 360° orientation of the Multiport valve for simple installation and service
- UV and corrosion resistant
- Hydraulically balanced flow distribution, to maximise filtration and backwashing
- Large filter base for stable floor mounting

Maximum working temperature of 50°C

Ease of Maintenance

Cleansing the filter simply requires turning the filter's multiport lever from the "filter" position to the "backwash" position, which reverses the flow of water in the filter, flushing the filter bed.

Filter Mode

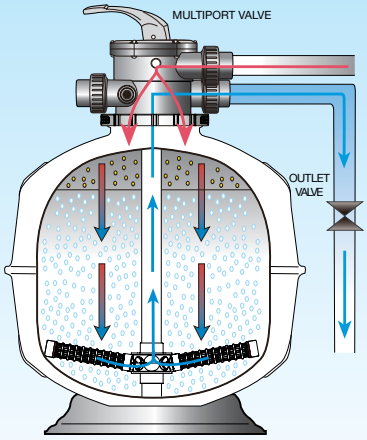

Backwash Mode

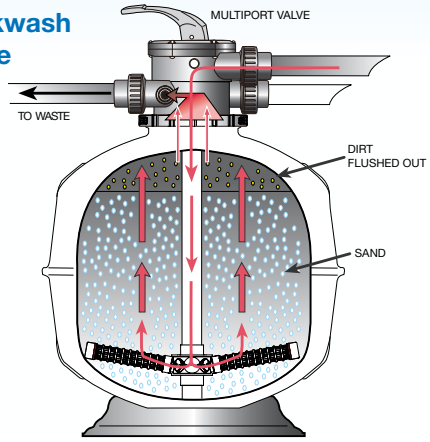

Technical Specification

Model No.	Valve Size (mm)	Inner Dia. (mm)	Filter Area (sq.m²)	Bed Depth (mm)	Max. Flow* (lpm)	Max. Pool Size (litres)	Min. Backwash (lpm)	Media Volume (litres)	Glass Pearl (kg)	Sand 16/30 (kg)	Zeolite 1 - 2.2 (kg)
E500	40	500	0.20	250	157	56,500	131	62	100	90	75
E600	40	600	0.28	250	226	81,000	189	89	144	130	107

Dimension (mm)

Model	Valve Size	A	B	C	D	E	F	G	H	V	K
E500	40	905	550	484	182	618	762	671	88	522	108
E600	40	942	650	484	182	655	799	708	88	560	115

Residential flow rate based on a velocity of 48m³/hr/m². Max. pool size is based on a 6hr turnover.

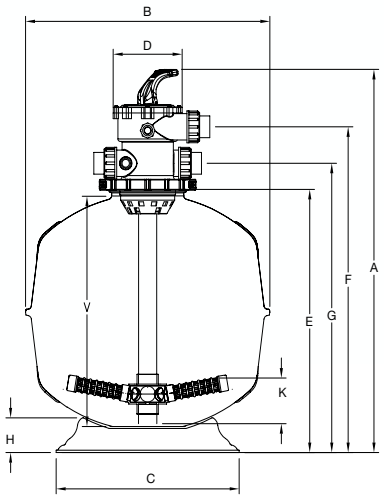

Warranty

Exotuf Filters	10 Years (conditional)
Filter Tank	10 Years
Multi Port Valve & Other components	1 Year
Labour	1 Year

Please refer to Waterco's warranty terms and conditions

OFFICES - AUSTRALIA

NSW - Sydney (Head Office)
Tel: +61 2 9898 8600

QLD - Brisbane
Tel: +61 7 3299 9900

VIC/TAS - Melbourne
Tel: +61 3 9764 1211

WA - Perth
Tel: +61 8 9273 1900

SA/NT - Adelaide
Tel: +61 8 8244 6000

ACT Distribution
Tel: +61 2 6280 6476

OFFICES - OVERSEAS

Waterco (Europe) Limited
Sittingbourne, Kent. UK
Tel: +44 (0) 1795 521 733

Waterco (USA) Inc
Augusta, Georgia, USA
Tel: +1 706 793 7291

Waterco Canada
Longueuil, Quebec, Canada
Tel: +1 450 748 1421

Waterco (NZ) Limited
Auckland, New Zealand
Tel: +64 9 525 7570

Waterco (C) Limited
Guangzhou, China
Tel: +86 20 3222 2180

Waterco (Far East) Sdn Bhd
Selangor, Malaysia
Tel: +60 3 6145 6000

PT Waterco Indonesia
Jakarta, Indonesia
Tel: +62 21 4585 1481

Waterco Singapore Intl Pte Ltd
Nehsons Building, Singapore
Tel: +65 6344 2378

Waterco France
SAINT PRIEST, France.
Tel: +33 4 72 79 33 30

DISTRIBUTED BY:

WATERCO
water, the liquid of life

SPASA
AUSTRALIAN MEMBER

ZZB1619 11/16

In the interest of providing better quality and value we are constantly improving and updating our products. Consequently, pictures and information on our brochures may sometimes vary slightly from models available.