AQUASTAR easy II

EN

CONTENTS

1	Copyrights	4
2	Introduction to operation manual	4
3	Warranty and liability	5
4	Instruction for safety at work	5
5	Safety instructions	6
6	Residual Risk	7
7	General	7
8	Directions for use	7
9	Assembly	8
10	Sequence of cycles	10
11	Flushing and changeover times	10
12	Function of membrane keyboard	11
13	Backwash time Switch SW1	12
14	Rinsing time Switch SW2	12
15	Switchpoints backwash time Switch SW3	12
16	Switch for pump-delay and pump-trigger SW4	13
17	Setting of the electric pressure switch SP1	13
18	Electric Connection	9
19	Technical data	9
20	Connection diagram for pump and Praher ball valve EO510	14
21	Control board	15
22	Dimensions	15
23	Explosion drawing of Aquastar EasyII	17
24	Dismantling Aquastar EasyII	18
25	Aquastar Easy Accessories	20
26	Errorcodes	21
27	Troubleshooting	22

1 Copyrights

This operation manual contains copyright protected information. All rights reserved to Praher Plastics Austria GmbH.

This operation manual is designed for use by operating personnel only. Copying, reproduction or translation of the present document into other languages in whole or in part is subject to express written permission by Praher Plastics Austria GmbH.

© 2018 Praher Plastics Austria GmbH

Knowledge of the instructions contained in this operation manual is indispensable for preventing failure and ensuring faultless operation of the Aquastar. Therefore, it is essential, that the person in charge of operating the equipment is familiar with the present documentation.

2 Introduction to operation manual

This operation manual is intended to facilitate familiarization with the Aquastar and utilization of the same for the intended purpose.

This operation manual contains important information for safe, proper and economical operation of the Aquastar. Compliance with these instructions will contribute to

- preventing danger
- reducing repair costs and equipment failure, and
- increasing the liability and service life of the Aquastar

This operation manual supplements the instructions provided by existing accident prevention and environmental protection regulations. It must be available at the place of utilization of the equipment at any time and must be read by each person intending to use the Aquastar. This means

- operation, including
- correction measures in case of faulty operation and
- maintenance

In addition to the operation manual and the compulsory accident prevention regulations applicable at the place of utilization of the equipment, the generally subject specific technical rules must be taken into account.

3 Warranty and liability

Warranty and liability claims in the context of damage to person or property shall be excluded where such damage results from one or several of the causes listed below:

- Improper use of the Aquastar
- Improper installation, putting into operation, operation and maintenance of the Aquastar
- Operation of the Aquastar with defective or improper safety devices
- Non-compliance with the instructions contained in the operation manual for installation, putting into operation, operation and maintenance of the Aquastar
- Unauthorized modification of the Aquastar
- Insufficient monitoring of components subject to wear and tear
- Inadequately performed repair of the Aquastar
- Damage of the Aquastar resulting from foreign matter or Force Majeure

Before commissioning, all gaskets of the device have to be checked, the cable glands and all outside screwing's must be retightened. Also leak and function tests have to be carried out. After the pressure test, all nuts and screws of the entire pipe system must be retightened in a depressurized state.

We recommend a maintenance service (testing of functionality and tightness) and careful visual inspection in regular maintenance intervals, whereas with high aggressive media, strong vibrations and significant variations of temperature, the intervals must be shortened. Seals must be considered as wear materials and must be lubricated and/or changed regularly. With unfiltered media we recommend the installation of line strainers.

Enduring damage due to neglect of the operation manual or due to damaging sealed parts lead to a lapse of the warranty. We do not take any liability for resulting damages thereof! Please read the operation manual carefully before starting operation.

4 Instruction for safety at work

- Each person, involved in the user's facility, in the installation, dismantling, putting into operation, operation or maintenance of the Aquastar must have read and understood the entire operation manual and, in particular, the chapter 'Safety Instructions'.
- The instruction and warning signs calling attention to dangers must be taken into account!

Dangerous voltage!
This is for your own safety

EN

5 Safety instructions

- This equipment has been built and examined according to safety precaution for electronic devices and has left the plant in a perfect safety-related condition
- To keep this status and to guarantee a safe operation, the user must observe the safety instructions, which are included in these instructions
- This installation work may only be undertaken by an authorized and licensed installer or electrical business
- This equipment is not intended for it by persons (including children) with reduced physical, sensory or mental abilities or for lack of experience and/or for lack of knowledge to be used it is, it by a person responsible for their security is supervised or received from it instructions, how the equipment is to be used. Children should be supervised, in order to guarantee that they do not play with the equipment.
- This equipment has been built and examined according to safety precaution for electronic devices and has left the plant in a perfect safety-related condition
- the electrical connection must have separating device built into the permanently installed electrical installation, which enables the disconnection of all electrical contacts with a contact space of min. 3 mm from the mains.
- Pay attention that the supply voltage is correctly protected and an earth-leakage circuit breaker ≤ 30 mA is installed.
- Only use the equipment in dry rooms, in which no combustible gasses and vapors are present.
- Do not put the equipment into operation immediately if it has been taken from a cold to a warm area. The thereby developing condensation water could destroy your equipment
- If the equipment has visible damages, does not work anymore or has been stored under adverse conditions for longer periods, then it is to be expected that a safe operation is no more possible. In this case the equipment is to be secured against unintentional start-up and if necessary to be decommissioned.
- Live parts can be uncovered when opening the cover or removing parts. Before an alignment, maintenance, a repair or change of parts or devices, the equipment must be separated from all voltage supplies, if opening the equipment is necessary. If after that an alignment, maintenance or a repair on the opened equipment under voltage is inevitable, it may only be done by experienced, skilled staff, which has knowledge of the associated dangers and/or the relevant regulations.
- Capacitors in the equipment can still be charged, even if the equipment is separated from all voltage supplies.
- Assembly and/or disassembly of the valve only in a pressure-free status (i.e. empty piping beforehand)
- Valve flow and/or direction of flow must be considered.

Each person involved in the operation and maintenance of the equipment must have read and understood the present operation manual!
It is for your own safety!

6 Residual Risk

6.1 Hazard generated by current

Manipulation of the Aquastar by operating staff is strictly prohibited and may only be performed by duly authorized staff, qualified for electrical work. Compliance with the corresponding instruction and prohibition signs is required.

6.2 Hazard generated by human error

The operating staff must be instructed in regard to the residual danger resulting from electricity and familiarized with correct operation. Efficiency of the safety training must be verified.

6.3 Hazard generated by current during cleaning work

Cleaning of the Aquastar may only be performed after disconnection from power supply (lever switch).

EN

7 General

PRAHER Aquastar controls are significant technical products, which are manufactured with high accuracy to the most modern technical production methods. Entitled complaints will naturally be rectified as fast as possible if they occur. The equipment has a warranty after valid European law. The warranty begins with the purchase date.

ATTENTION! For relief of the sealing system the valve is shipped on intermediate position and is not sealed! Prior to operation it has to be electrically set to position “Filter”!

8 Directions for use

This is a control unit for a **Praher multiport valve** with 6 positions. Aquastar Easy II is a fully automatic backwashing system. The backwash cycle can be trigger fully automated by time and optional by pressure.

The Aquastar must never be operated without a Praher V6 valve to avoid damage to the device

A filter pump connection is activated about 1 sec after the respective position is reached.

Additional electrical connection for a Praher ball valve EO510 during the cycle is available.

9 Assembly

Device installation – installation of the valve

Install the valve in the conduit according to the labeling and the sketch below. Use adapter unions. Threaded connections should be sealed only with Teflon strip. Although the device is functional in any position, it must not be installed with the actuator facing down. If the difference in level between system and tank exceeds 3 meters, stop valves or non-return valves should be installed to prevent severe damage to the actuator and the valve due to excessive pressure and flow.
As filter medium can be washed out during backwashing and rinsing, we recommend fitting the drain with a throttle. Otherwise a stuck valve disk can adversely affect the flawless functioning of the Aquastar. Polluted or grainy filtering media require the use of adequate pre filters.

Important! During a cycle the filter pump motor must be shut off!

The Praher Aquastar EasyII is approved for 6-way valves by Praher Plastica Austria GmbH. Malfunctions can occur with any other valve type as we are unable to guarantee that these valves match the dimensions of the Praher 6-way valves.

9.1 Function- and installation diagram

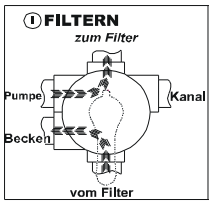

Filtering the medium (i.e. water)

Pool → Pump → Valve (towards filter) → Filter → Valve (away from Filter) → Pool

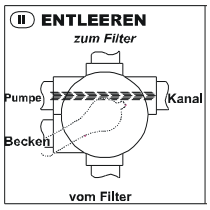

Draining of the pool with the pump

Pool → Pump → Valve → Sewer

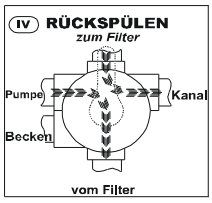

Cleaning filter medium (i.e. sand) in counter flow (reversed flow direction in filter)

Pool → Pump
→ Valve (away from filter) → Filter
→ Valve (towards filter) → sewer

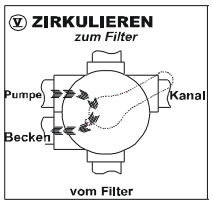

Circulating the medium without Filter (Filter is bypassed)

Pool → Pump
→ Valve → Pool

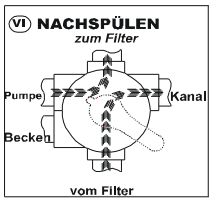

Cleaning filter medium (i.e. sand) after backwash cycle

Pool → Pump
→ Valve (towards filter) → Filter
→ Valve (away from filter) → sewer

Pump	→	away from pump
Top	→	towards filter
Bottom	→	away from filter
Return	→	towards pool
Waste	→	towards sewer

6 way valve type:	11/2“ and 2“	
Connections:	thread or solvent socket (all connections open)	
Max. operating pressure:	ABS 11/2“, 2“	3,5 bar
	GFK 11/2“, 2“	6 bar

10 Electric Connection

a)Connection of the supply voltage

⏚ | L1 | N 100 – 240 V AC (170 -300 DC)

b)Connection for pump

13 | 14

Potential free relays: U: 15-230VAC; I: 0,1A - 8A
For position 'filter', 'backwash', 'rinse' and 'waste' 'circulate' and after a time lag of approx. 1 sec. the clamps [13 -> 14] are connected.

c)Connection for ball valve to drain line

4 | G | 3

For position 'filter' and 'circulate' the clamps [G → 3] are connected
For position 'waste' and for the whole backwash cycle the clamps [G → 4] are connected

h)Connection for option Pressure Sensors 0-6 Bar (ST8)

+5V0 | PS | GND

Connect only the Praher Plastics Austria pressure sensor to these contacts.
Device number of the pressure sensor set is 131378
+5V0 : brown cable; plug connection 1
PS : green cable; plug connection 2
GND : white cable; plug connection 3

d)A Connection BWC (ST12)

Connection for a potential free switch.
If the connection is closed for 1 second or more a backwash cycle is triggered

e)Connection CI/TLS (ST14)

Connection for a potential free switch.
If the connection is closed for 1 second or more the valve drives to position circulate. It can be used while dosing.
If you trigger ST12 and ST14 at the same Time for more than 1 second, the valve drives to filer position

f) Connection multifunktional-relays (ST13)

Potential free relay: U: 15-230VAC; I: 0,1A - 3A
The relays is closed at circulate
If an error occurs see error table

11 Technical data

Voltage:	24 V AC/DC / 100-240V AC (170 – 300V DC)
Protection:	IP 65
Frequency:	50-60 Hz
Max. Power:	20 Watt 11/2“, 2“
Relays Pump:	8A at cosφ=1
Relays Ball valve:	8A at cosφ=1
Multifunctional-relays:	3A at cosφ=1
Environmental conditions:	0-40°C, 0-95%RH not condensing
Max static pressure:	0,3 Bar
Max water column:	3m

EN

12 Sequence of cycles

Start position FILTER – device ON

- Start of backwash cycle by pressing the test key on the keyboard
- Control lamp 'test key' for backwash cycle is illuminated
- Output 'pump' clamp [13]-[14] switches off (no alley)
- Output ball valve switches from clamp [G]-[4] to [G]-[3]
- Pump set Pump delay elapses

Valve goes to backwash position

- Pump time delay of approx. 1 sec. elapses
- Output 'pump' clamp [13]-[14] closes
- Preset backwash time is counting down (switch S1)S
- Output 'pump' clamp [13]-[14] switches off (no alley)
- Pump set Pump delay elapses

Valve goes to rinsing position

- Pump time delay of approx. 1 sec. elapses
- Output 'pump' clamp [13]-[14] closes
- Pre-set rinsing time is counting down (switch S2)
- Output 'pump' clamp [13]-[14] switches off (no alley)
- Pump set Pump delay elapses
- Output ball valves switches from clamp [G]-[4] to [G]-[3]

Valve goes to filter position

- Pump delay time of approx. 1sec is counting down
- Output 'pump' clamp [13]-[14] closes

13 Flushing and changeover times

Time delay pump ON	5 sec/ 20 sec
CHANGEOVER Filter – Backwash	approx. 30 sec
Backwash	45 sec / 360 sec
CHANGEOVER Backwash time - Rinsing	approx. 22 sec
Rinsing	20 sec / 90 sec
CHANGEOVER Rinsing - Filter	approx. 18 sec.
Cycle time	approx. 2 min 34 sec / approx. 9 min

14 Function of membrane keyboard

OFF
Pressing this key switches of the equipment, regardless of the valve position

ON
Pressing this key (yellow control lamp is illuminated) switches on the equipment, valve goes to basic position - Filter

TEST
Pressing this key (green control lamp is illuminated) triggers the backwash cycle for the length of a backwash procedure

DRAIN
Pressing this key (red control lamp is illuminated) sets the valve to position „Waste“
Water is being drained into the sewer system

14.1 Circulate

In order to set the automatic 6- way backwash valve to position “CIRCULATE“ and afterwards again to position “FILTER’, following steps have to be made:

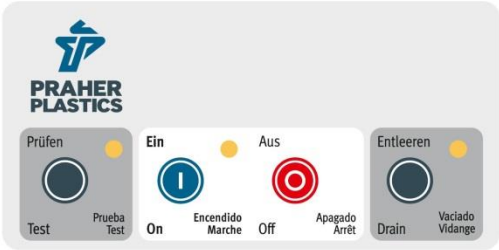

- Go to basic position press key „ON“
- Press keys „TEST “ and „DRAIN“ at the same time (min. 4 sec) until the LED of “TEST” is illuminated

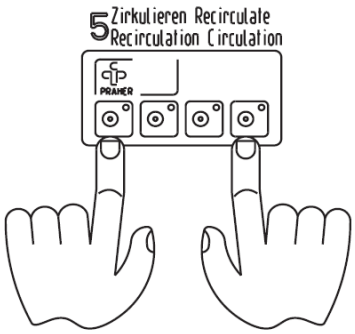

ATTENTION!
After simultaneous pressing of the keys first the LED of „TEST“ is illuminated and then the “DRAIN” LED briefly. Only then the LED of “TEST” starts blinking

- After „CIRCULATE“ is finished, press OFF
- Go to basic position press key „ON“

14.2 Winter Position

Winter Position as release for the sealing system during winter time

- Press key „On“ for basic position
- Press keys „Test“ and „On“ at the same time (min. 4 sec) until the Aquastar start to run
- When the winter position has been reached the Aquastar will automatically turn itself off
- Press key „On“ for basic position

The valve does not seal anymore

EN

15 Backwash time Switch SW1

The backwash time is set with the switch SW1 on the control board.
Four backwash times are available.

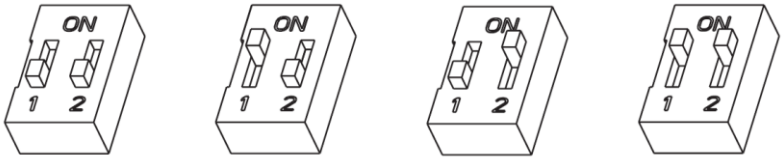

45 sec. 75 sec. 120 sec. 360 sec.

16 Rinsing time Switch SW2

The rinsing time is set with the switch SW2 on the control board.
Four rinsing times are available.

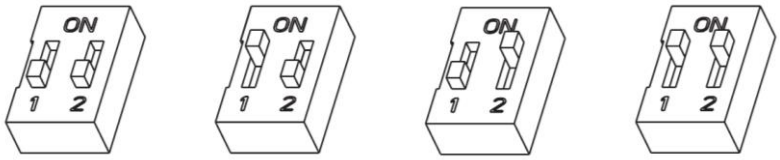

20 sec. 40 sec. 60 sec. 90 sec.

17 Switchpoints backwash time Switch SW3

The switch points for backwash time are set with switch SW3 on the control board.
Four switch points for backwashing are available.

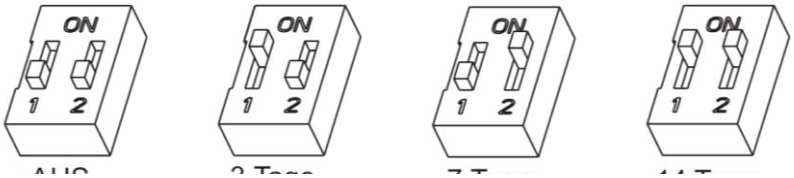

OFF 3 days 7 days 14 days

ATTENTION! Prior to setting/adjusting the switchpoints 'backwashing' the valve needs to be on position 'FILTER' and the Aquastar has to be turned off (see page 11)

17.1 Time of activation of backwash cycle

Example: Backwash every Monday 09:15
- set switch SW3 to switch point 7 days and
- turn on the Aquastar at 09:15 (press „ON" button on the keyboard)

In order to alter the time of activation, just press the "TEST BUTTON" on the keyboard at the wanted activation time.

Example: Change activation from Monday 09:15 to Friday 08:00
- „TEST" button at the keyboard on Friday 08:00

18 Switch for pump-delay and pump-trigger SW4

With SW4 you can handle the functionality of the filter pump

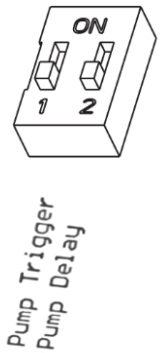

If you switch the first switch (pump trigger) to „ON“ position the backwash cycle will only start if the pump is switches on. If the pump is of, the backwash cycle starts if the pump switches already on. If the Pump switches off while a backwash cycle is running, a new backwash cycle will be triggered it the pump switches already on. If this switch is “OFF” (standard position) this function is also switched off. It can be switched of if the Aquastar is controlled by a PLC or another control system.
If you switch the second switch (pump delay) to „ON“, the pump off delay time is expanded to 20 seconds. If it is “OFF” the pump delay time is 5 seconds.
The pump delay time is the time between the pump switches off and the valve lifts up
You can expand that time if the pipe lines are very long.

19 Setting of the electric pressure switch SP1

You have to set it if the option presser Sensor is installed
The maximum operating pressure in the valve is measured by an electronic pressure switch.
The activation pressure of the pressure switch is set by switch SP1 on the circuit board.
For changing the activation pressure, turn the arrow by using a screw driver clock/or anti-clockwise, until the arrow shows the wanted pressure (see chart)

Position	bar	Position	bar
0	0,5	8	1,3
1	0,6	9	1,4
2	0,7	A	1,5
3	0,8	B	1,75
4	0,9	C	2,0
5	1,0	D	2,5
6	1,1	E	3,0
7	1,2	F	3,5

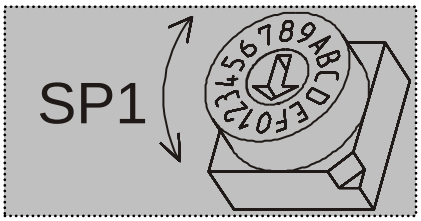

20 Connection diagram for pump and Praher ball valve EO510

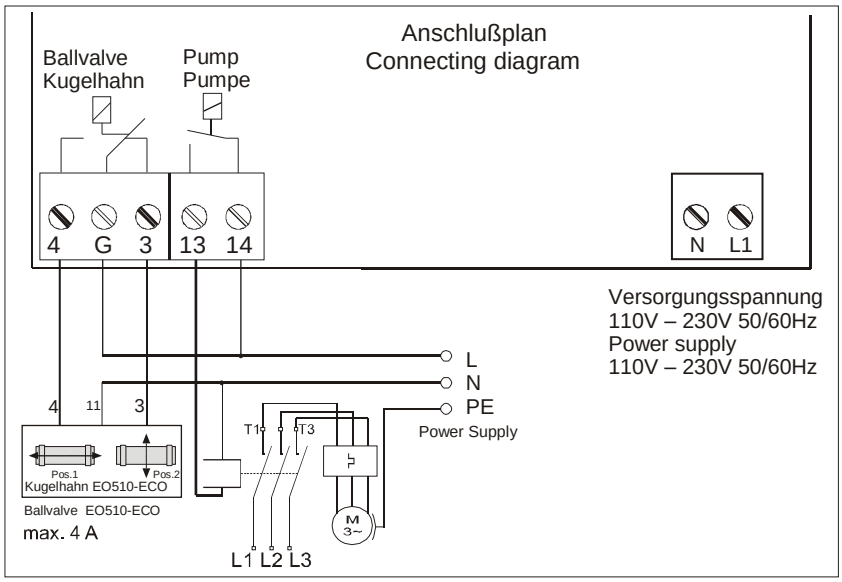

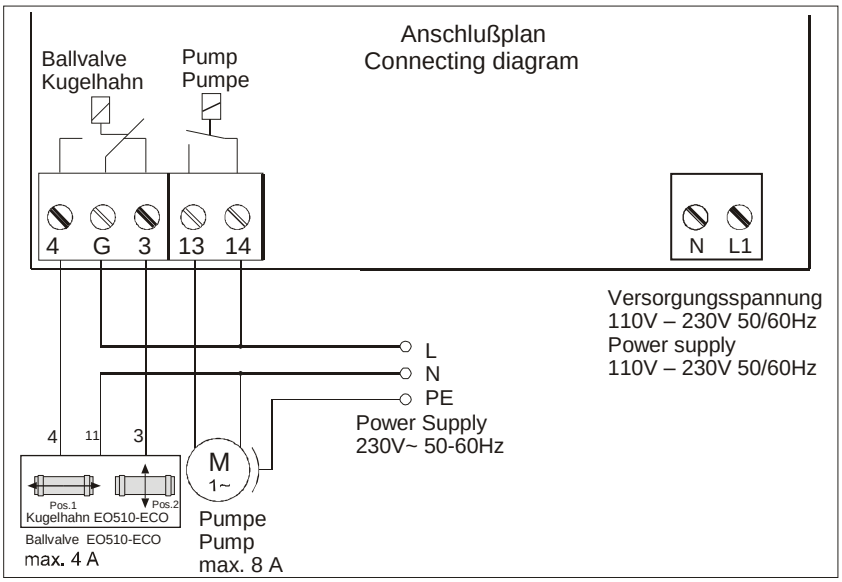

21 Control board

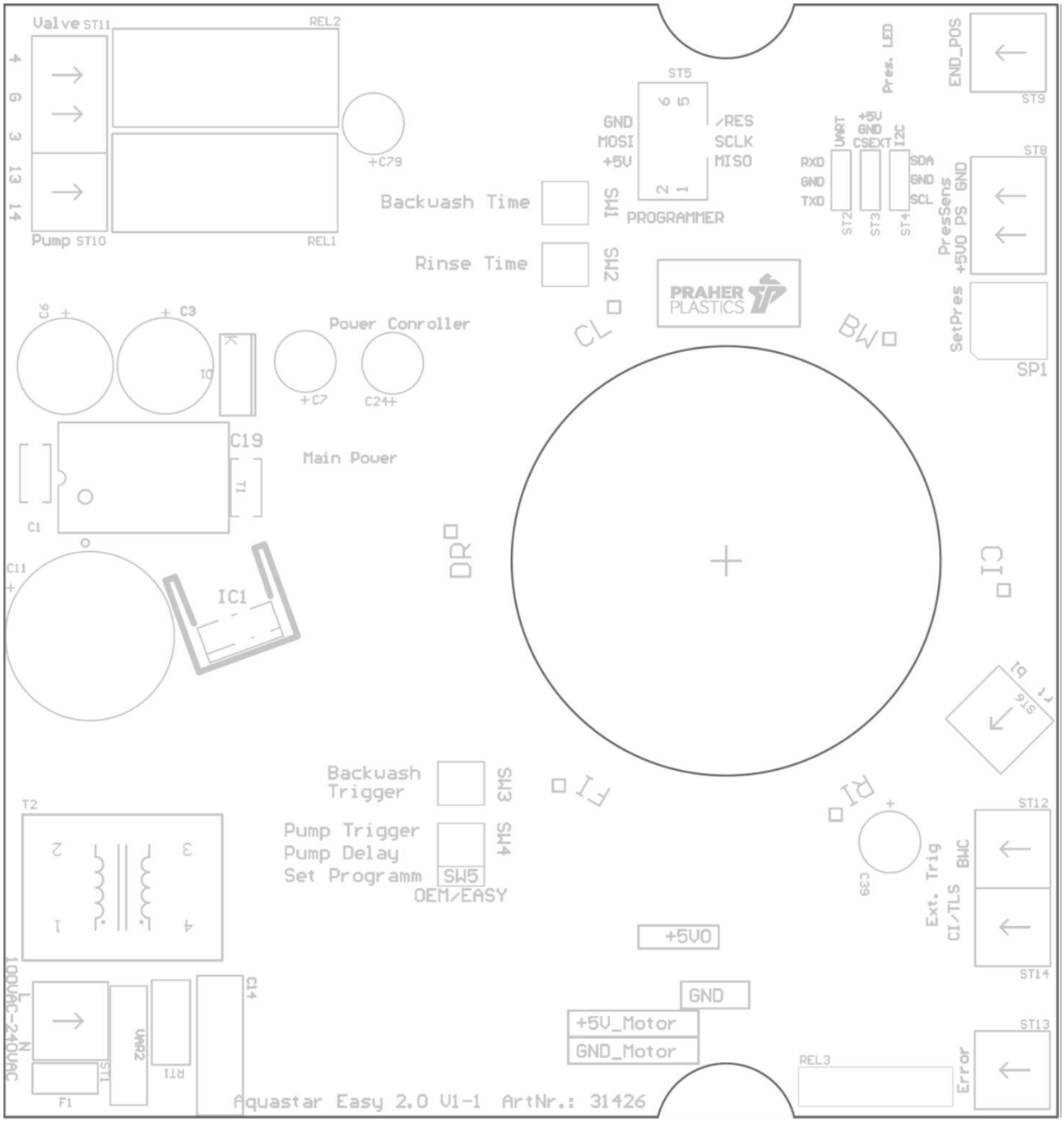

EN

22 Dimensions

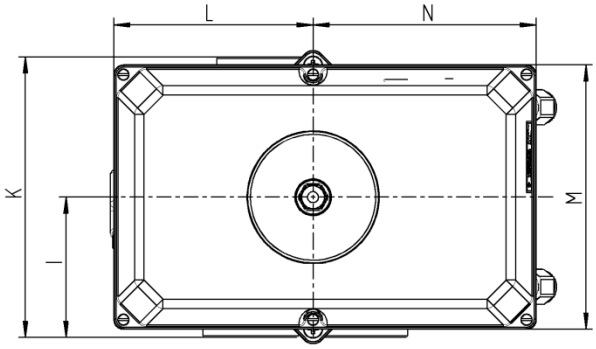

Side Mount

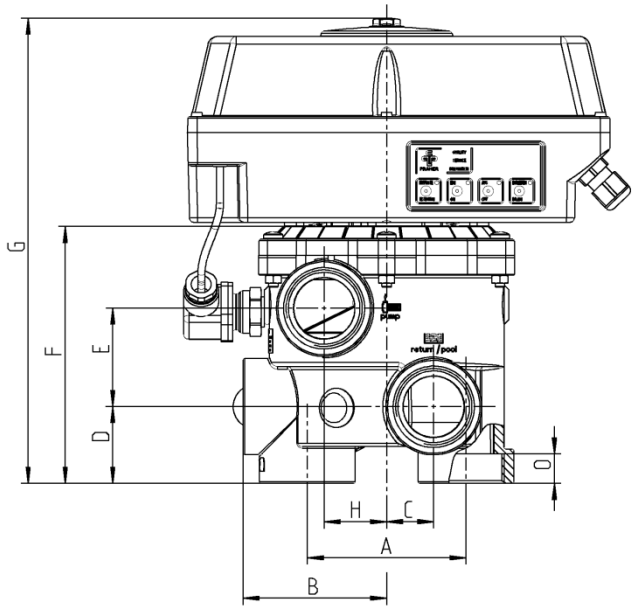

Top Mount

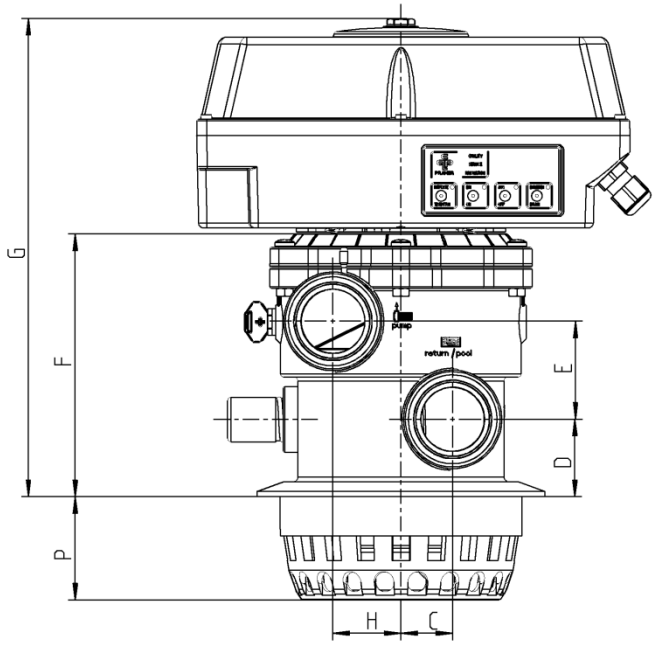

	1 ½" SM	1 1/2" TM	2" SM
A	99,5	X	110
B	90	X	114
C	29,5	31,5	38
D	48	47	60
E	61,5	59,5	81
F	163,5	160	210
G	295	291	339
H	39	42,5	36
I	87,5	90	114
K	175	180	228
L	125	125	125
M	165	165	165
N	140	140	140
O	18,5	18,5	26
P	X	62,5	X

Dimensions in mm

23 Explosion drawing of Aquastar EasyII

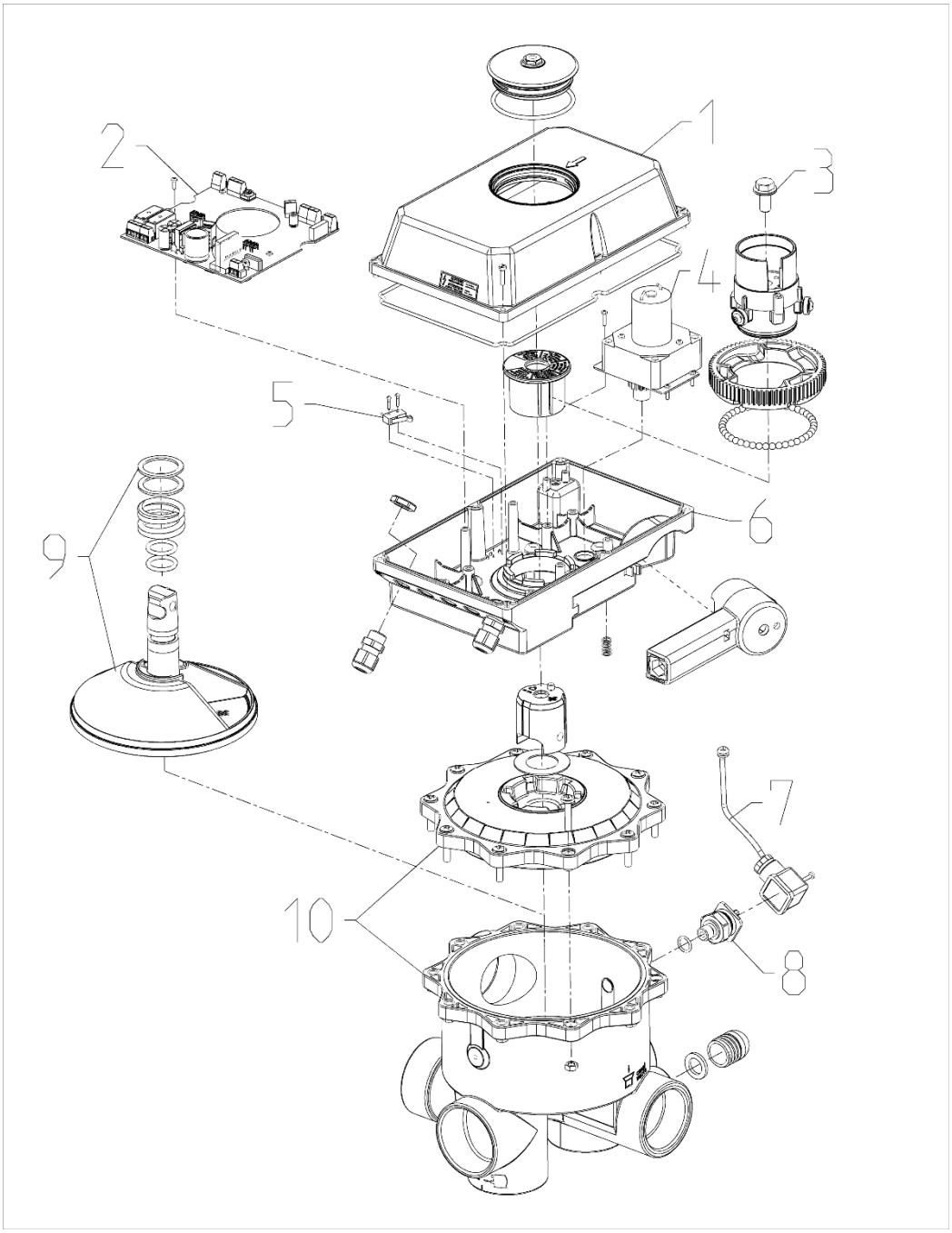

1. Aquastar lid with foam rubber cord
2. Control board
3. Hexagon screw
4. Gear motor
5. Pump end switch
6. Aquastar body bottom
7. Cabel with Connector plug (only with option pressure sensor)
8. Pressure sensor (if the sensor is installed)
9. Valve plate set-up
10. V6ND valve 1 ½", 2"

EN

24 Fitting and dismantling Aquastar EasyII

For dismantling the electronic drive off the valve a box spanner with a wrench size of 15mm is needed. You also can use the emergency handle.
Carry out Installation in reverse order (step 8 – 1). The Installation of the device onto a manual valve is described on next page. Inspection glass (step 2) to be screwed stalwartly (4Nm – 8Nm) and hexagon screw (step 4) to be screwed with a minimum torque of 10 Nm.

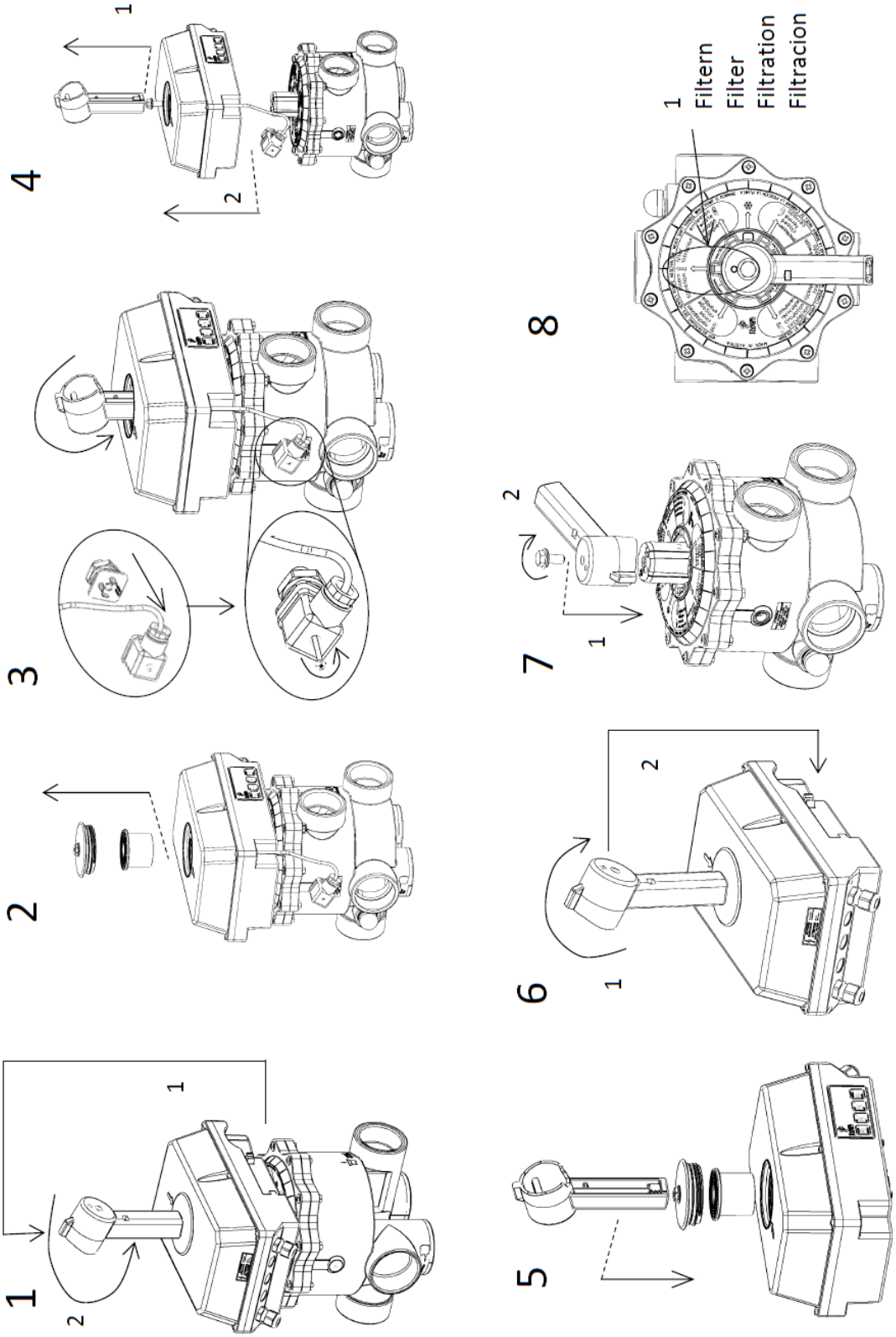

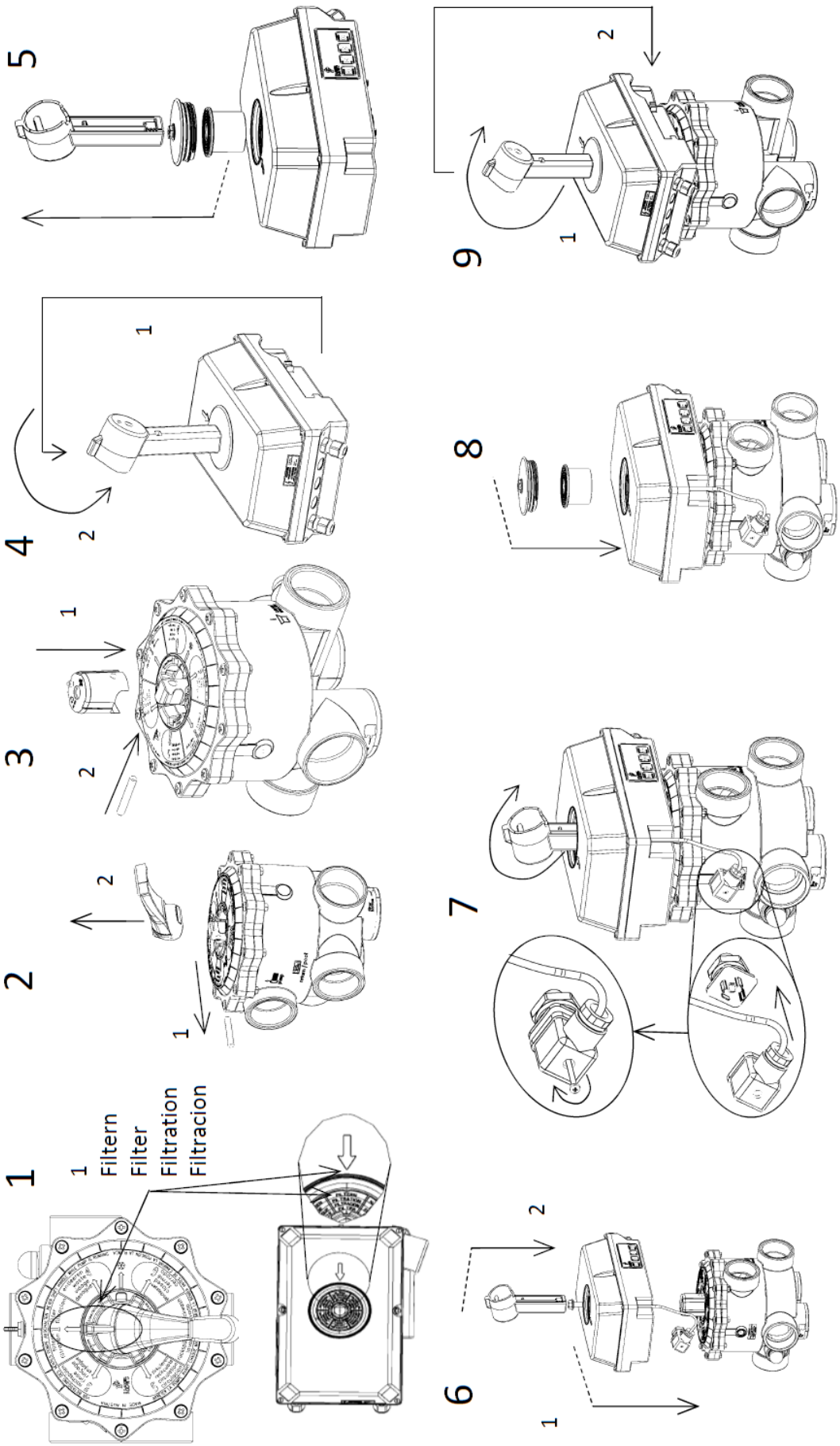

If a pressure switch is installed, make sure that the cable on the plug side looks diagonally downwards and make sure that the cable inlet of the plug is screwed tight to secure the tightness of the pressure sensor

25 Aquastar EasyII Accessories

OCEAN-adapter unions male thread – solvent socket

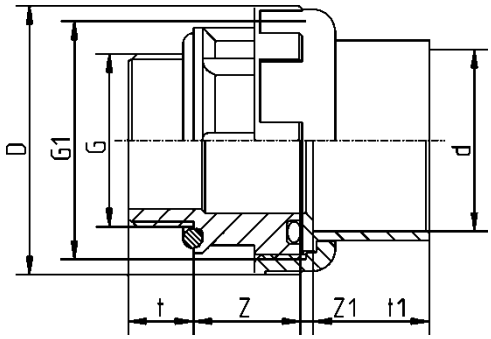

d - D	T	T1	Z	Z1	D	E1
50-1,5“ BSP	18	31,5	30	3	74	2 1/4“
48,4-1,5“ NPT	18	31,5	30	3	74	2 1/4“
50-2“ BSP	23,5	31,5	36	3	92	2 3/4“
63-2“ BSP	23,5	38,5	36	3	92	2 3/4“
60,3-2“ NPT	23,5	38,5	36	3	92	2 3/4“

Line strainer S4

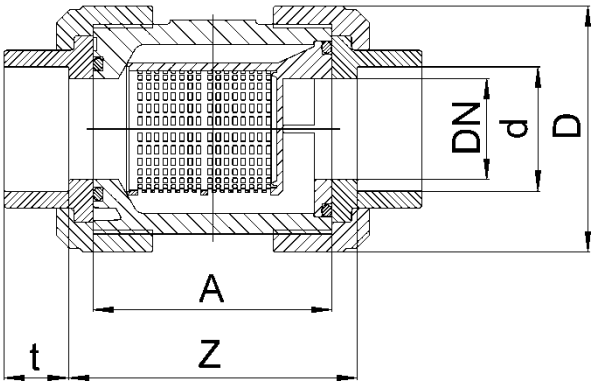

d	DN	A	Z	t	D	PN
50	40	95	104	31,5	101	16
63	50	109	121	38,5	124,5	16

Check valve S6

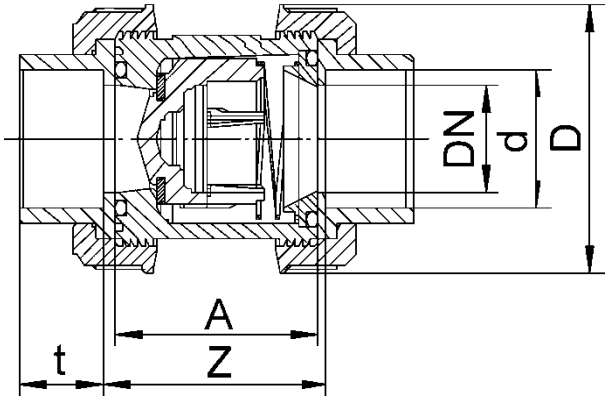

D	DN	A	Z	t	D	PN
50	40	77	87	31,5	101,5	16
63	50	87	99	38,5	115,3	16

PVC ball valve DN32 – DN50 S6 EO510 ECO 230V

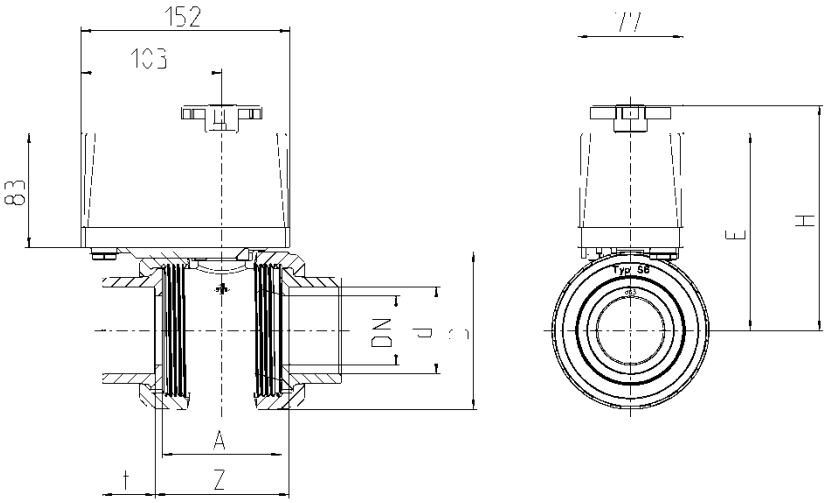

PVC	S6		
DN	32	40	50
d	40	50	63
G	1 1/4“	1 1/2“	2“
A	77	77	87
D	101,5	101,5	115,3
E	138,5	138,5	143,5
H	159	159	164
t	26,5	31,5	38,5
Z	87	87	99
PN	16	16	16
max. bar	3	3	3

26 Errorcodes

a) Power loss

Cause:	The power supply has been interrupted
Action:	When the Aquastar is at an unsafe position it approaches filter if the main supply is back.
Signal:	1s
Reset:	Connect power.
Possible reasons:	Power loss. Cable break

b) Current error

Cause:	The permitted motor current has been exceeded
Action:	The motor stops. After two seconds the Aquastar retries to reach position
Signal:	3s
Reset:	No need to reset. If current is below current-limit in the next attempt, normal operation goes on
Possible reasons:	Aquastar is not enough fixed to the valve

c) Current error state

Cause:	The permitted motor current has been exceeded three times in this position cycle
Action:	Aquastar is set to errorstate. No possible actions until Aquastar is reset
Signal:	4s
Reset:	Press “ON” and “OFF” Button simultaneously for at least 5s
Possible reasons:	Aquastar I not enough fixed to the valve. Motor is broken. Valve is broken. Pump has not been turned off. Water column of 3 meter exceeded.

d) One Hall error state

Cause:	Chosen position has not been reached within 3 minutes or 3 rounds.
Action:	Aquastar is set to errorstate. No possible actions until Aquastar is reset
Signal:	5s
Reset:	Press “ON” and “OFF” Button simultaneously for at least 5s
Possible reasons:	Defective electronics

e) Hall error state

Cause:	Motor has been turned on but no position change for 30 seconds
Action:	Aquastar is set to errorstate. No possible actions until Aquastar is reset
Signal:	6s
Reset:	Press “ON” and “OFF” Button simultaneously for at least 5s
Possible reasons:	Defective electronics. Insufficient power supply. Motor is broken. End pos. switch is not connected. Motor is not connected.

EN

27 Troubleshooting

- **All LEDs on the keyboard are flashing at the same time**
    - See Error codes
- **The drive rotates continually without approaching a position**
    - Device was driven without matching valve
        - Please return for repair; damage has already occurred in this case
- **The drive continually triggers the backwash cycle**
    - Rotary switch SP1 is set to too low a pressure
        - See chapter 19 Setting of the electric pressure switch
    - The system contains pressure boosting components (e.g., Solar absorbers)
        - Set the pressure sensor so that the Aquastar does not trip at this increased pressure
- **The pump fails to switch on or off**
    - Relay burnt out
        - The maximum pump current of 8A was exceeded
    - The pump is not properly connected
        - The pump must always be looped via contacts 13-14
- **The disk is not lifting freely, or the drive is not running smoothly, or flow noises can be heard**
    - The pump does not switch off on lifting the valve disk
        - The pump must always be looped via contacts 13-14
    - The drop from the water surface to the valve is too great
        - Make sure that the total water column does not exceed 3m.
    - The V6 valve is soiled or clogged by foreign matter
        - Clean the valve and use a pre-filter

NOTES

EN

Made in Austria/Europe.

© Praher Plastics Austria GmbH
Zertifiziert nach / certified acc. to
EN ISO 9001:2015
PM LD 4.2-001A EN

Diese Druckschrift enthält keine Gewährleistungszusagen, sondern will lediglich eine erst Information vermitteln. Das Programm wird ständig erweitert, daher entsprechen die Ausführungen und Typen dem Stand bei Drucklegung. Technische Änderungen vorbehalten!

This publication includes no warranty, but will merely provide initial information. Due to continuous expanding product range, the standards and types correspond to the date of printing. Technical modifications reserved!

Videoanleitungen:
Montageanleitungen/Assembly instruction:
https://www.youtube.com/playlist?list=PL2jaAbZBnqISKbU0XC5zUYsmlqnIE08LR

POWER.
VALVE-CONTROLLED

Praher Plastics Austria GmbH
Poneggenstraße 5 . 4311 Schwertberg . Österreich
T +43 (0)7262 / 61178-0 . F +43 (0)7262 / 61203
sales@praherplastics.com . www.praher-plastics.com

© Praher Plastics Austria GmbH BA/DEEN/19/09/442/A/90343B